Nipples for adapter with built-in LED driver GA-XXX
Attacchi per adattatore da binario con LED driver incorporato GA-XXX

Made in Europe

SELV 60V



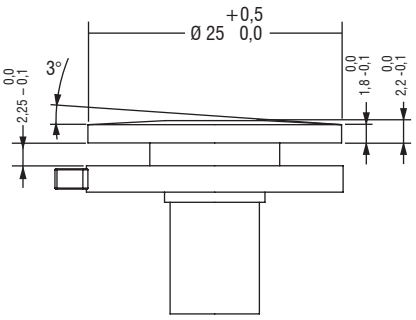

Accessories Accessori	Code Codice	Thread Cavo	H mm	Ø mm	Color Colore		
XTSA 57/8-9	488788014	M 10x1	8	7,4	Alluminium Alluminio		**XTSA 57/8-9** 
XTSA 57/12-9	488788015	M 10x1	12	7,4	Alluminium Alluminio		**XTSA 57/12-9** 

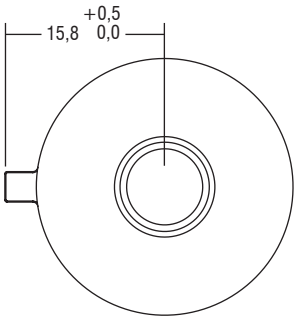



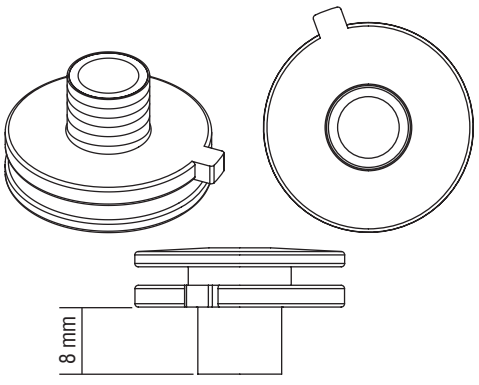



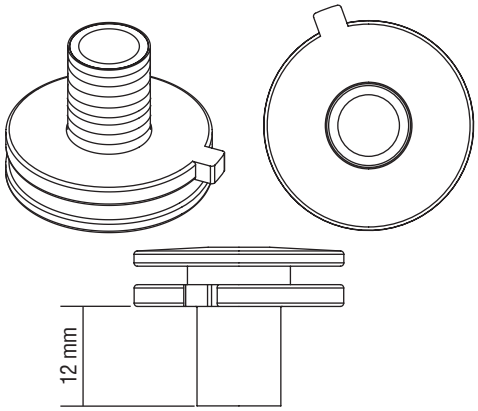

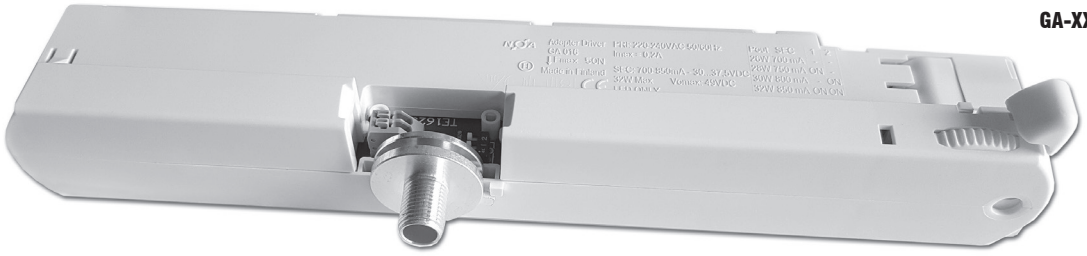

GA-XXX

230V LED driver track adapters
Alimentatore LED 230V per adattatori da binario

10.1