ELED HP

Emergency light KIT for power LED and LED modules
KIT per luce d'emergenza per power LED e moduli LED

Made in Italy

constant CURRENT | constant VOLTAGE

ONLY WITH INCLUDED "ARTS ENERGY" BATTERY

ELED HP

ELED HP BI

DIP-SWITCH | SAFETY PROTECTIONS

Voltage
Tensione
220 - 240 V

Frequency
Frequenza
50-60 Hz

Potenza
Power
2 - 4,5 W

Supply current
Corrente di alimentazione
27 (1h) - 35 (3h) mA

Operating time
Autonomia
1-3 h
With TCI battery
Con batteria TCI

Charge time
Tempo di ricarica
12/24 h

ta °C: 0...+55

tc °C: 75

Standards compliance
EN 55015
EN 61000-3-2
EN 61347-2-13
EN 61347-2-7
EN 61547

Max. pcs for CB B16A
(see page info17)
27 pcs

In rush current
27A 250μsec

Article Articolo	Code Codice	ex ELDN T code	EMERGENCY DURATION 24h CHARGE	EMERGENCY DURATION 12h CHARGE	GREEN SIGNAL LED INCLUDED	Ni-Cd BATTERY 7,2 V - 1,6 Ah COMPACT-COMPATTI	Ni-Cd BATTERY 7,2 V - 4 Ah COMPACT-COMPATTI	Ni-Cd BATTERY 2x 3,6 V - 4 Ah LINEAR-LINEARE	Battery case BOX 1h	Battery case BOX 3h
ELED HP	123023	123010	1h	-	✓	✓				
ELED HP KIT	123023K	123010K	1h	-	✓	✓			✓	
ELED HP BI	123024	-	1h	-	✓	✓				
ELED HP/3	123023/3	123010/3	3h	1,5h	✓			✓		
ELED HP/3 KIT	123023/3K	123010/3K	3h	1,5h	✓		✓			✓
ELED HP/3 BI	123024/3	-	3h	1,5h	✓			✓		

Article Articolo	Code Codice	EMERGENCY DURATION 24h CHARGE	EMERGENCY DURATION 12h CHARGE	GREEN SIGNAL LED INCLUDED	Ni-MH BATTERY 7,2 V - 2 Ah COMPACT-COMPATTI	Ni-MH BATTERY 7,2 V - 4 Ah COMPACT-COMPATTI	Ni-MH BATTERY 2x 3,6 V - 4 Ah LINEAR-LINEARE	Battery case BOX 1h	Battery case BOX 3h
ELED HP	123025	1h	1h	✓	✓				
ELED HP KIT	123025K	1h	1h	✓	✓			✓	
ELED HP BI	123026	1h	1h	✓	✓				
ELED HP/3	123025/3	3h	1,5h	✓			✓		
ELED HP/3 KIT	123025/3K	3h	1,5h	✓		✓			✓
ELED HP/3 BI	123026/3	3h	1,5h	✓			✓		

Only emergency driver, NO BATTERY - Solo driver emergenza, NO BATTERY			EMERGENCY DURATION		GREEN SIGNAL LED INCLUDED
Article Articolo	**Code Codice**	**ex ELDN T code**	**24h CHARGE**	**12h CHARGE**	
ELED HP	123023NB	123010NB	1h	-	✓
ELED HP BI	123024NB	-	1h	-	✓
ELED HP/3	123023/3NB	123010/3NB	3h	1,5h	✓
ELED HP/3 BI	123024/3NB	-	3h	1,5h	✓

- Class II protection against electric shock for direct or indirect contact (ELED HP).
- It can be used for lighting equipment in protection class I and II (ELED HP BI).
- Instant emergency operation at mains failure.
- Maintained or not maintained operation (maintained operation suitable with electronic drivers or dimmable electronic drivers).
- Multi-power dimmable version DIP-SWITCH, constant current or constant voltage to power LED to LED modules.
- "High temperature" Ni-Cd / Ni-MH batteries.
- Charge indicator with GREEN LED.
- "Rest mode" facility with remote control device and 9V battery.
- **Keep the battery not connected to the kit until the final installation of the system (luminaire installation).**
- **Do not stock battery and kit connected together.**

Technical data
- Length battery cable: 280 mm / 11''.
- Length LED cable: 350 mm / 13,8''.
- LED mounting hole: Ø 9 mm / 0,35''.
- Supply current: 27 (1h) - 35 (3h) mA
- Terminal blocks max. connection size: 1,5 mm² / AWG15.
- Max distance between driver and lamp: 2 mt / 6 ft.

- Protetto in classe II contro le scosse elettriche per contatti diretti e indiretti (ELED HP).
- Utilizzabile per apparecchi di illuminazione in classe di protezione I e II (ELED HP BI).
- Intervento istantaneo ad ogni mancanza di rete.
- Funzionamento in sola emergenza o in luce continua (luce continua in abbinamento con alimentatori elettronici e alimentatori elettronici dimmerabili).
- Regolazione con DIP-SWITCH, per power LED a corrente costante o per moduli LED a tensione costante.
- Batterie tipo Ni-Cd / Ni-MH "alta temperatura".
- Indicatore di ricarica con LED VERDE.
- Possibilità d'inibizione in "modo riposo" con interruttore esterno centralizzato connesso a batteria 9V.
- **Mantenere la batteria non connessa al KIT fino all'installazione finale del sistema (installazione della lampada).**
- **Non immagazzinare collegati tra loro batteria e KIT.**

Dati tecnici
- Lunghezza cavo batteria: 280 mm / 11''.
- Lunghezza cavo LED: 350 mm / 13,8''.
- Foro di montaggio LED: Ø 9 mm / 0,35''.
- Corrente di alimentazione: 27 (1h) - 35 (3h) mA
- Portata morsettiera: 1,5 mm² / AWG15.
- Distanza massima dall'alimentatore dalla lampada: 2 m / 6 ft.

7 YEARS WARRANTY 3% FAILURE RATE | 10 YEARS WARRANTY 5% FAILURE RATE

PRODUCER'S LIABILITY TCI | POWERED WITH ELECTRONICS WARRANTY 10 YEARS 10 ACCORDING TO TCI CATALOGUE CONDITIONS

Only for emergency kit
Solo per kit emergenza

ELED HP

Emergency light KIT for power LED and LED modules
KIT per luce d'emergenza per power LED e moduli LED

Made in Italy

IP 20 | SCREW FIXING | Ø56 2,20'' | Weight - Peso: gr. 58 / 2,04 oz. Pcs - Pezzi 1

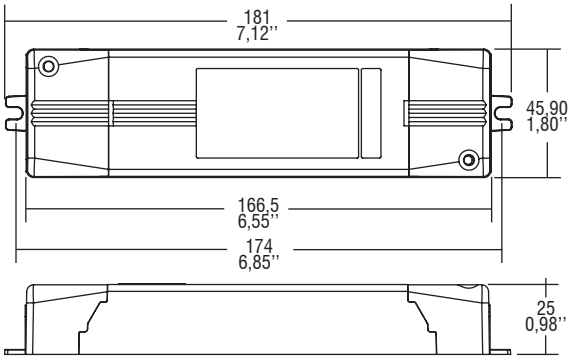

BUILT-IN | SCREW FIXING | Weight - Peso gr. 47 / 1,65 oz. Pcs - Pezzi 25

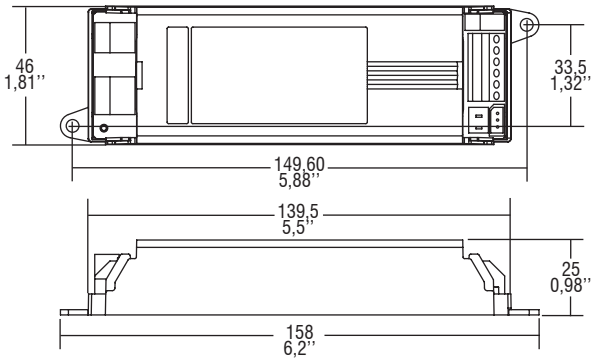

Wiring diagrams - Schemi di collegamento (max. LED distance: 2 mt / 6 ft - Distanza max. LED: 2 mt / 6 ft).

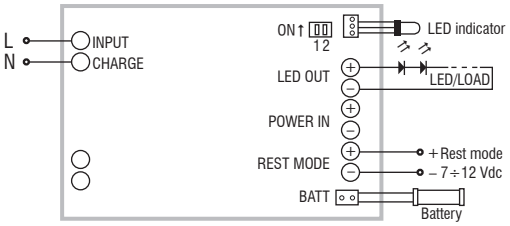

Non-maintained (emergency only) diagram
Collegamento non permanente (solo emergenza)

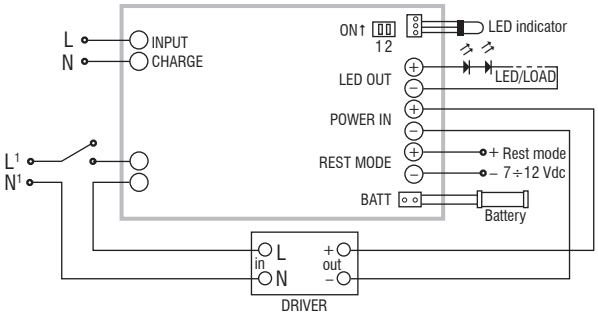

Maintained with external electronic driver diagram
Collegamento permanente (illuminazione ordinaria)

ELED HP 1h

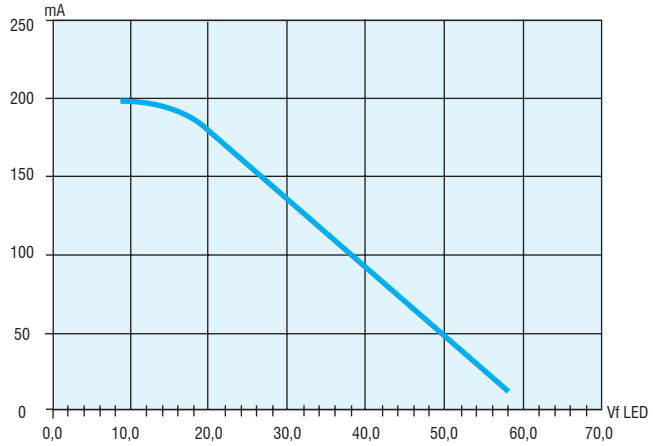

ELED HP 3h

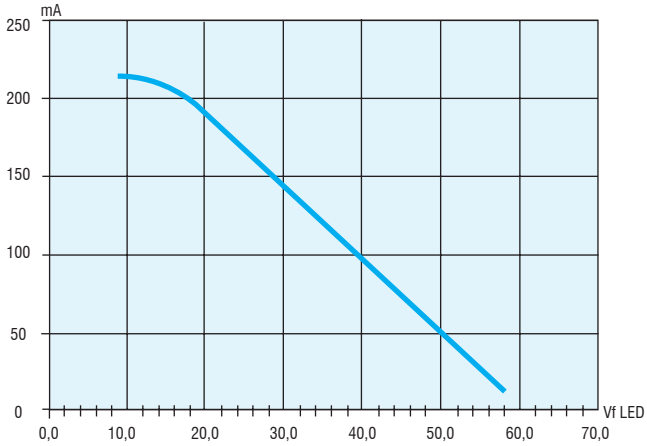

Dip-Switch position	Emergency working voltage (VL)	Emergency output current (1h)	Emergency output current (3h)	Max LED modules voltage controlled
A	9-12 V	200 mA	220 mA	20 W
B	9-24 V	200-160 mA	220-170 mA	40 W
C	9-46 V	200-70 mA	220-75 mA	-
D	9-58 V	200-25 mA	220-20 mA	-